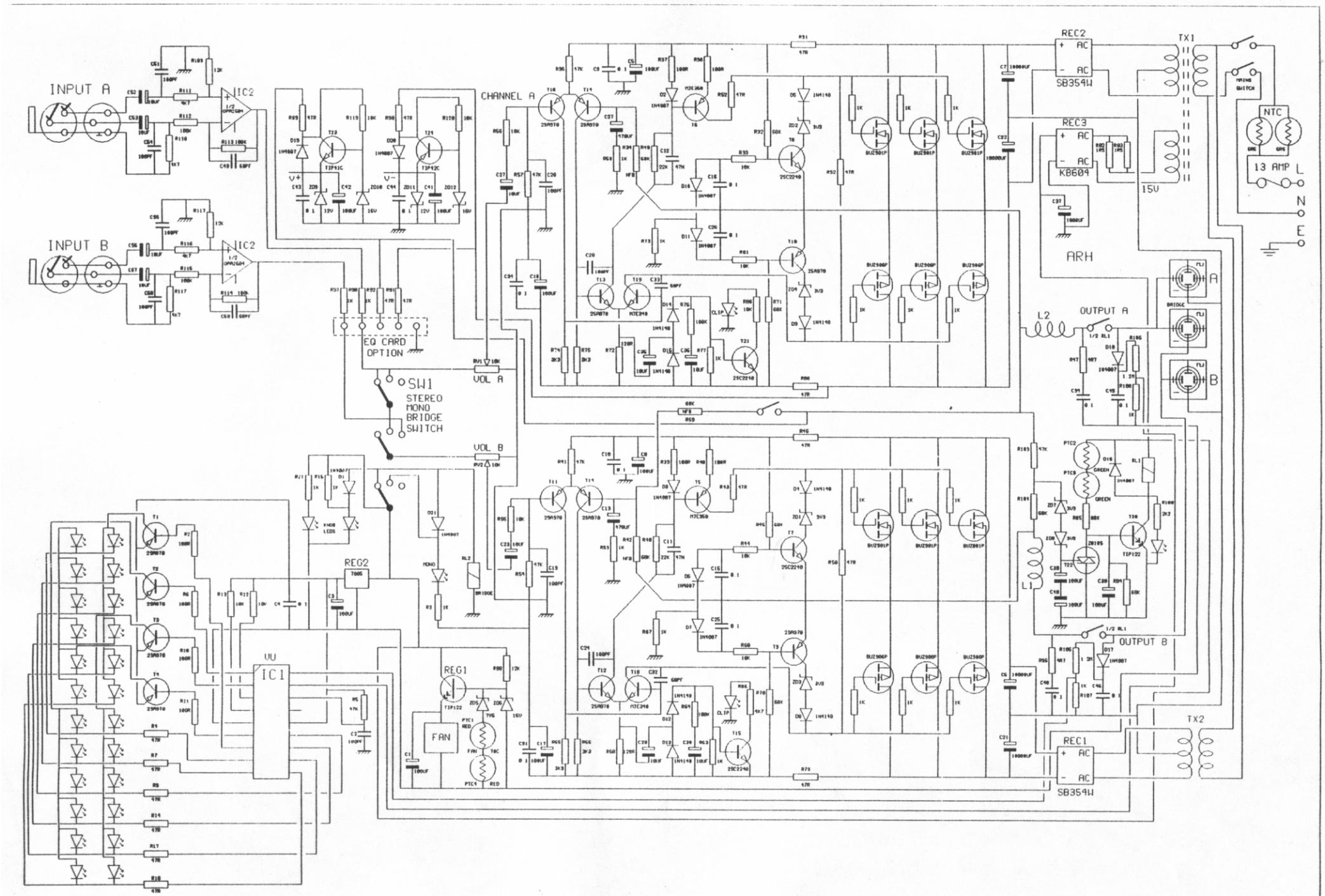

ORM	FL AMPLIFIERS	1997	ISSA